RelaySquid

Relay Controlled Output Board

Datasheet

Product Features:

- 1 Power Input
- 4 AC or DC Power Outputs
- Rated for 10A
- Controllable by logic input

Contents:

1. AC Basics Page 2
2. Product Rating Page 2
3. Product Flow Chart Page 3
4. Logic Controls Page 4-5

1. AC Basics

Alternating current (AC) is used to transmit large amounts of power over far distances. In the United States typical residential AC systems provide -120V to 120V of alternating current with a frequency around 60Hertz.

The AChot and ACcold (Neutral) are used to distinguish phase differences in the AC system.

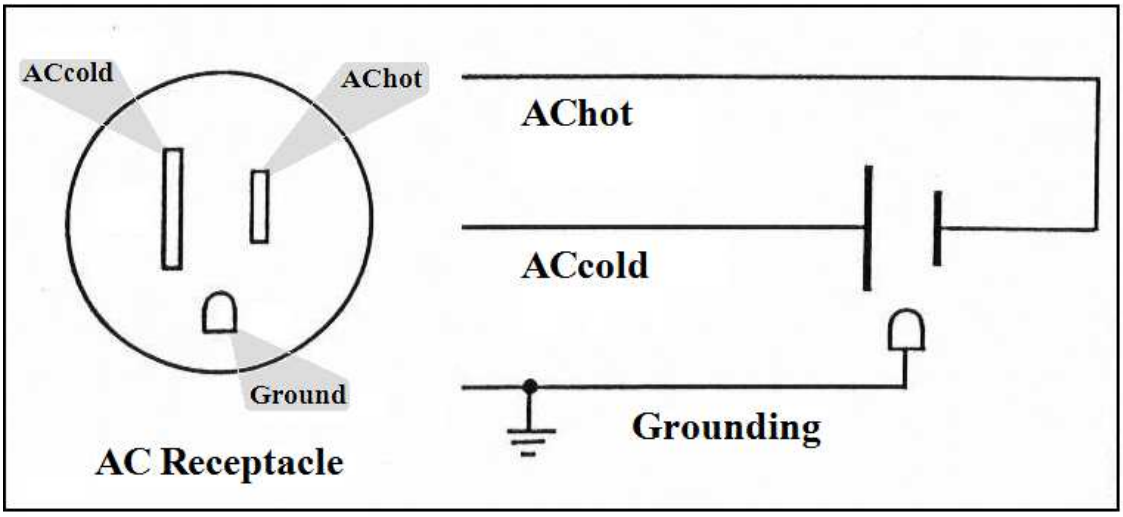

Figure 1

2. Product Rating

Ratings:

	Max Voltage	Max Current	Max Switching Power
J6 Relay Input	200V (AC), 100V (DC)	10A (AC), 5A (DC)	-
J1, J2, J3, J4 Relay Output	200V (AC), 100V (DC)	10A (AC), 5A (DC)	250VA

Maximum Switching Speed	20 cycles per minute
J8 Minimum Switching Capacity	100mA 5V DC

3. RelaySquid Flow Chart

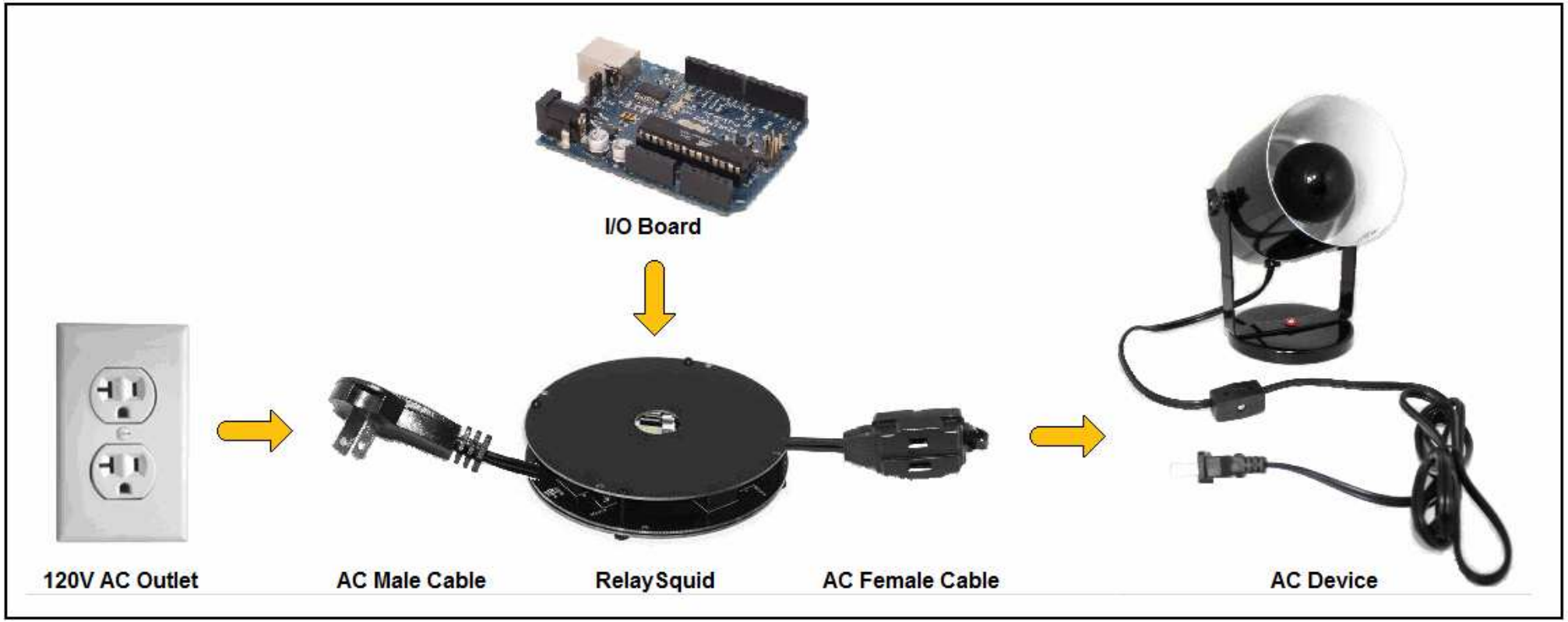

Figure 2

4. Logic Controls

The RelaySquid is controlled by the digital logic pins of connector "J8". There are 4 inputs which each control a respective relay's output.

J8 – This 6 pin input header is used to control the logic of the relays.

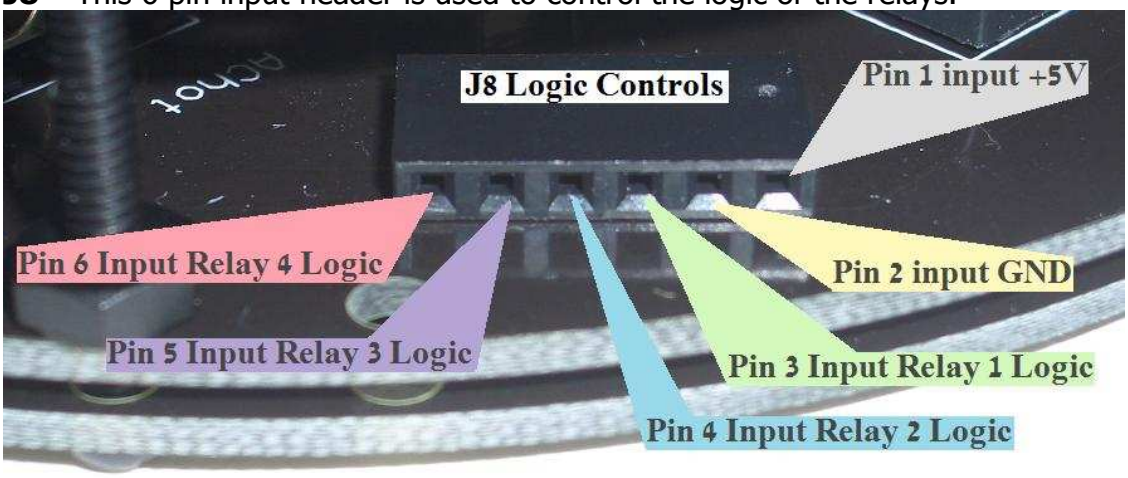

Figure 3

J8 Pin 1 – The farthest right pin is the logic power which typically needs +5V from a stable supply.

J8 Pin 2 – The second pin from the right is the logic ground (GND) which needs a stable 0V.

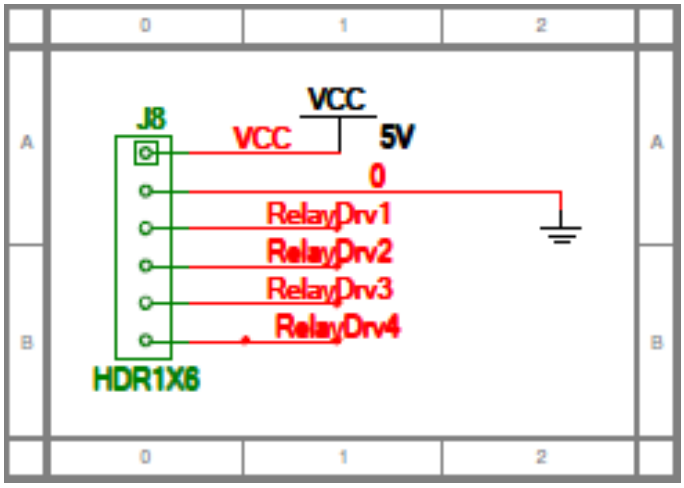

Figure 4

J8 Pin 3 – The third pin from the right is the logic that controls the output of Relay 1 (K1). When this pin is logic level High, the relay K1 (which controls the

output of connector J1 AChot's output) will connect the AChot input to the J1 AChot output.

J8 Pin 4 – The fourth pin from the right is the logic that controls the output of Relay 2 (K2). When this pin is logic level High, the relay K2 (which controls the output of connector J2 AChot's output) will connect the AChot input to the J2 AChot output.

J8 Pin 5 – The fifth pin from the right is the logic that controls the output of Relay 3 (K3). When this pin is logic level High, the relay K3 (which controls the output of connector J3 AChot's output) will connect the AChot input to the J3 AChot output.

J8 Pin 6 – The sixth pin from the right is the logic that controls the output of Relay 4 (K4). When this pin is logic level High, the relay K4 (which controls the output of connector J4 AChot's output) will connect the AChot input to the J4 AChot output.

		J8 Logic Input							
		J8 Pin 3		J8 Pin 4		J8 Pin 5		J8 Pin 6	
		HIGH +5V	Low 0V	HIGH +5V	Low 0V	HIGH +5V	Low 0V	HIGH +5V	Low 0V
J1 Relay 1 (Output)	ACcold		J6 Accold (Input)	J6 Accold (Input)	J6 Accold (Input)	J6 Accold (Input)	J6 Accold (Input)	J6 Accold (Input)	J6 Accold (Input)
	AChot	J6 AChot (Input)	OFF	-	-	-	-	-	-
J2 Relay 2 (Output)	ACcold	J6 Accold (Input)	J6 Accold (Input)	J6 Accold (Input)	J6 Accold (Input)	J6 Accold (Input)	J6 Accold (Input)	J6 Accold (Input)	J6 Accold (Input)
	AChot	-	-	J6 AChot (Input)	OFF	-	-	-	-
J3 Relay 3 (Output)	ACcold	J6 Accold (Input)	J6 Accold (Input)	J6 Accold (Input)	J6 Accold (Input)	J6 Accold (Input)	J6 Accold (Input)	J6 Accold (Input)	J6 Accold (Input)
	AChot	-	-	-	-	J6 AChot (Input)	OFF	-	-
J4 Relay 4 (Output)	ACcold	J6 Accold (Input)	J6 Accold (Input)	J6 Accold (Input)	J6 Accold (Input)	J6 Accold (Input)	J6 Accold (Input)	J6 Accold (Input)	J6 Accold (Input)
	AChot	-	-	-	-	-	-	J6 AChot (Input)	OFF

Table 1. Squid Truth Table